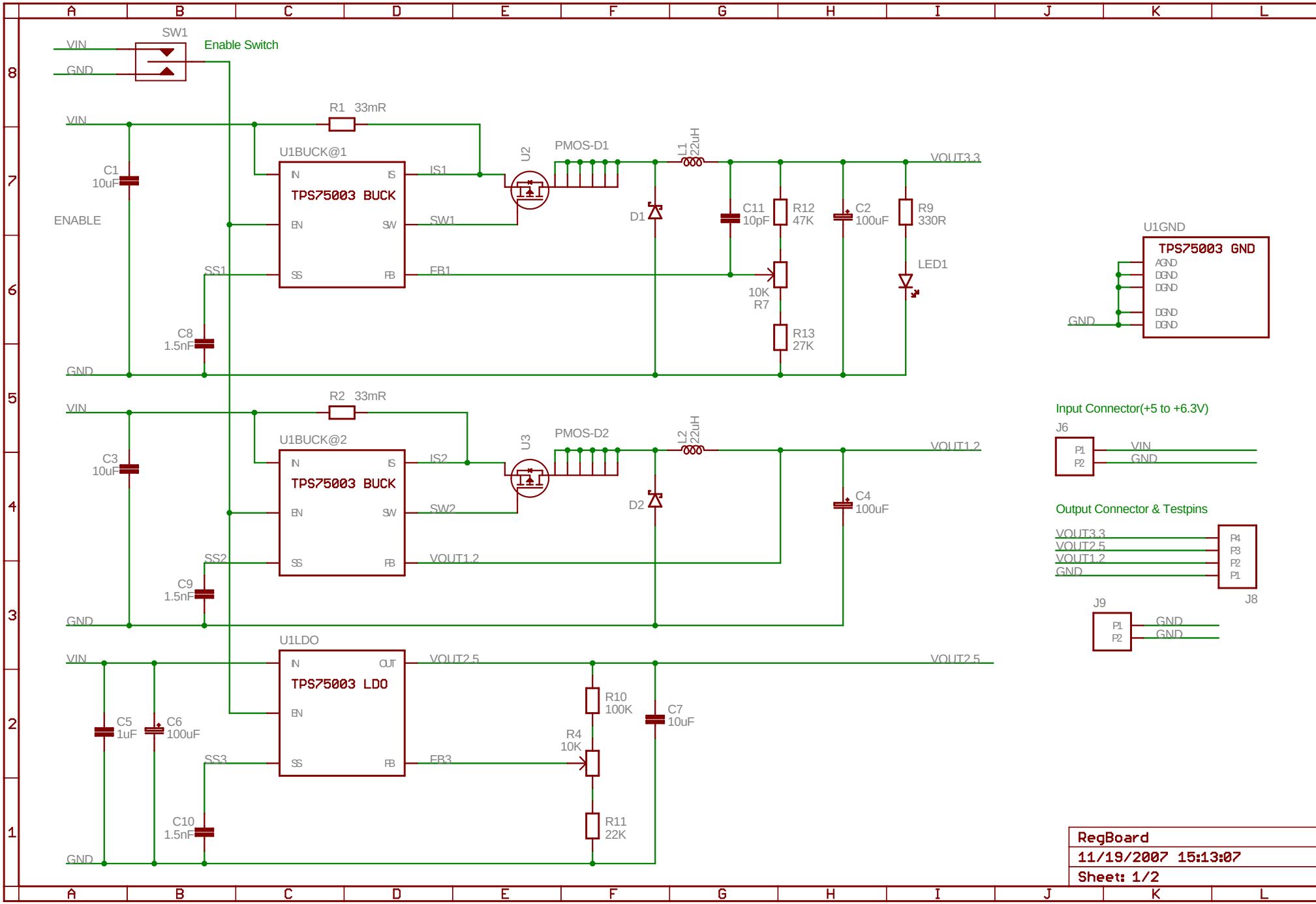
SW1
Enable Switch
VIN
GND
R1 33mR
U1BUCK@1
TPS75003 BUCK
IN
IS
EN
SW
SS
FB
IS1
SW1
FB1
SS1
U2
PMOS-D1
L1 22uH
VOUT3.3
C1 10uF
ENABLE
D1
C11 10pF
R12 47K
C2 100uF
R9 330R
LED1
10K R7
R13 27K
C8 1.5nF
U1GND
TPS75003 GND
AGND
DGND
R2 33mR
U1BUCK@2
IS2
SW2
VOUT1.2
SS2
U3
PMOS-D2
L2 22uH
C3 10uF
D2
C4 100uF
C9 1.5nF
Input Connector(+5 to +6.3V)
J6
P1
P2
Output Connector & Testpins
VOUT3.3
VOUT2.5
VOUT1.2
P4
P3
J8
J9
U1LDO
TPS75003 LDO
OUT
VOUT2.5
C5 1uF
C6 100uF
R10 100K
C7 10uF
R4 10K
SS3
FB3
C10 1.5nF
R11 22K
RegBoard
11/19/2007 15:13:07
Sheet: 1/2

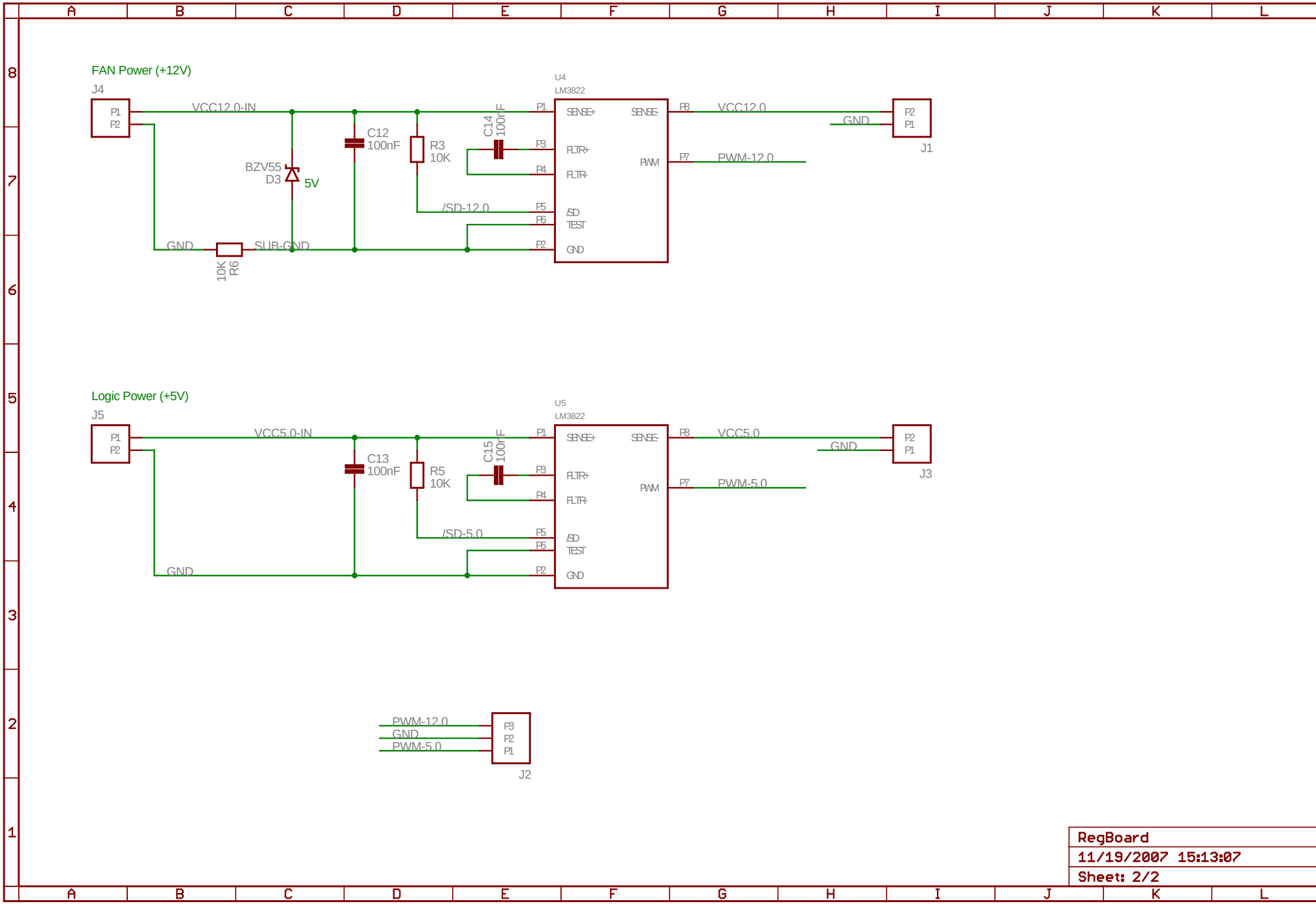

RegBoard
11/19/2007 15:13:07
Sheet: 2/2